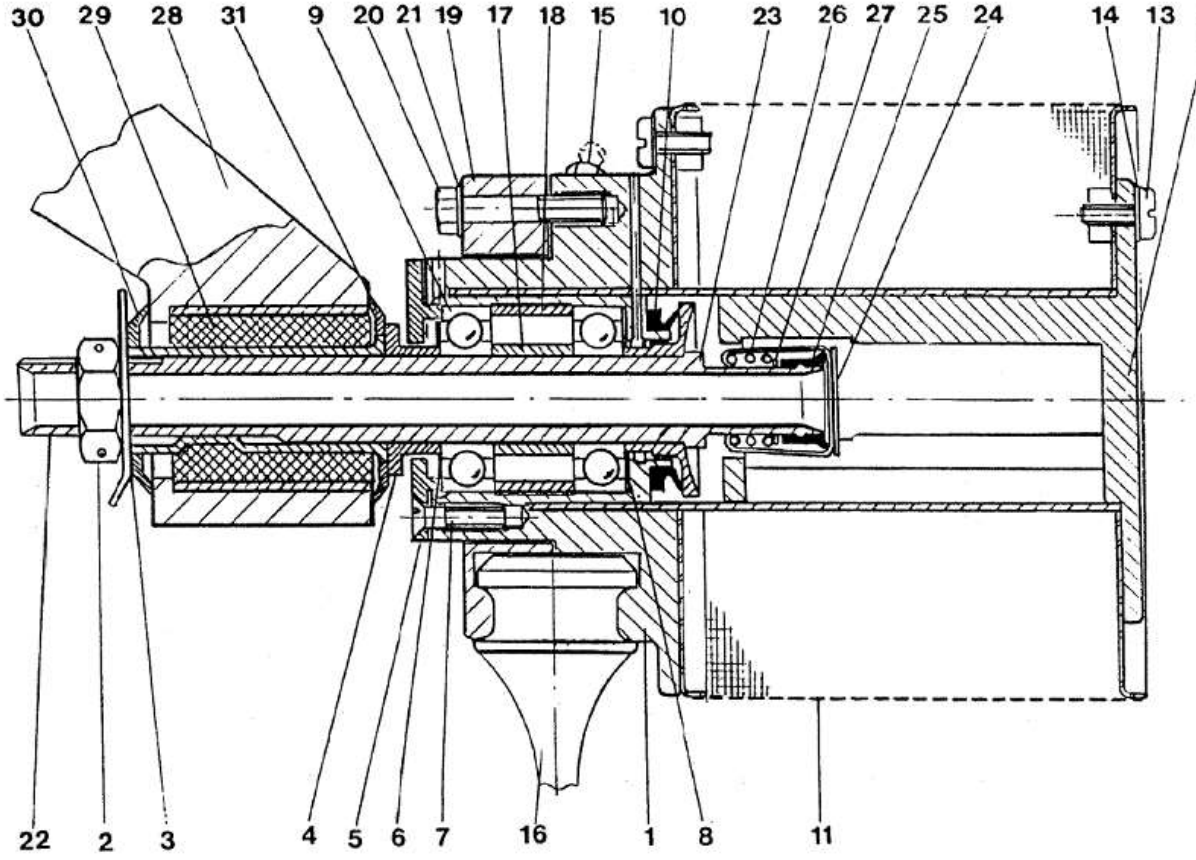

Fig. 9 – AU5000 Atomiser

Item	Part No	Description	Qty	Notes
1	EX2478	Hub Body Assembly	1	
2	EX1514	Nut	1	
3	EX1975	Washer	1	
4	EX2493	Spacer Bush	1	
5	EX2485	Bearing Retaining Plate	1	
6	EX2492	Washer Sealing	1	
7	A206C16	Screw 8-32 CSK	3	
8	EX2479	Washer, Sealing	1	
9	CBP663	Bearing	2	
10	CBP482	'V' Ring	1	
11	EX1510/20	Gauze Assy 20 Mesh	1	Alt EX1510/14
12	EX4386	Deflector Cap	1	
13	EX2612	Screw 8-32	6	
14	SP123C	Washer	6	
15	EX3329	False Grease Nipple	1	
16	EX1772/2	Fan Blade	3	Alt EX2021/2, EX6353
17	EX1489	Bearing Spacer Inner	1	
18	EX1541	Bearing Spacer Outer	1	
19	EX2477	Clamp Ring	1	
20	AN3C10A	Bolt	3	
21	SP123D	Washer	3	
22	EX2292	Spindle Assy	1	
23	EX2825	Spindle Bare	1	) These items
24	EX2291	Cap	1	) supplied assembled
25	CBP766	Seal	1	) together as
26	CBP845	Spring	1	) item 22
27	CBP828	Circlip	1	)
28	Various	Mounting Brackets		Supplied separately
29	EX1949	Shock Bush		Supplied separately
30	EX1974	Shield Front		Supplied separately
31	EX1973	Shield Rear		Supplied separately