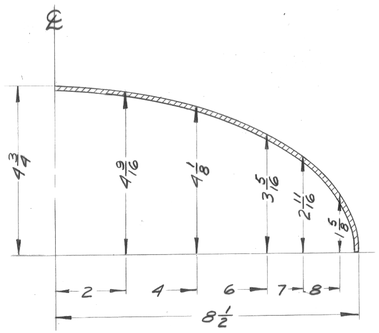

SECTION A-A

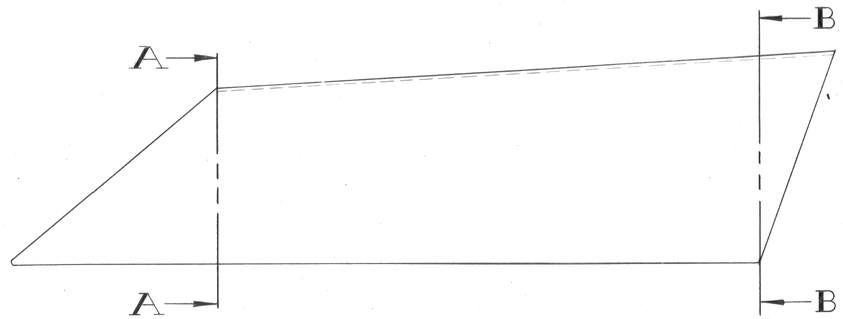

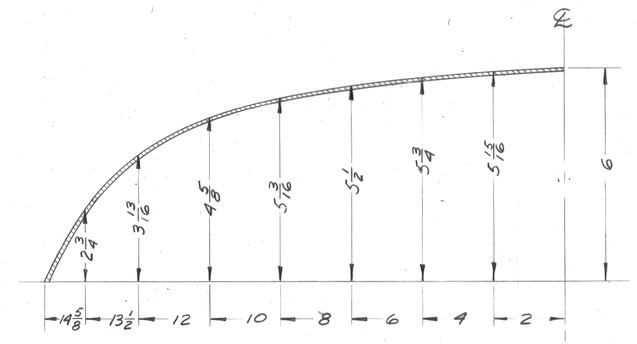

SECTION B-B

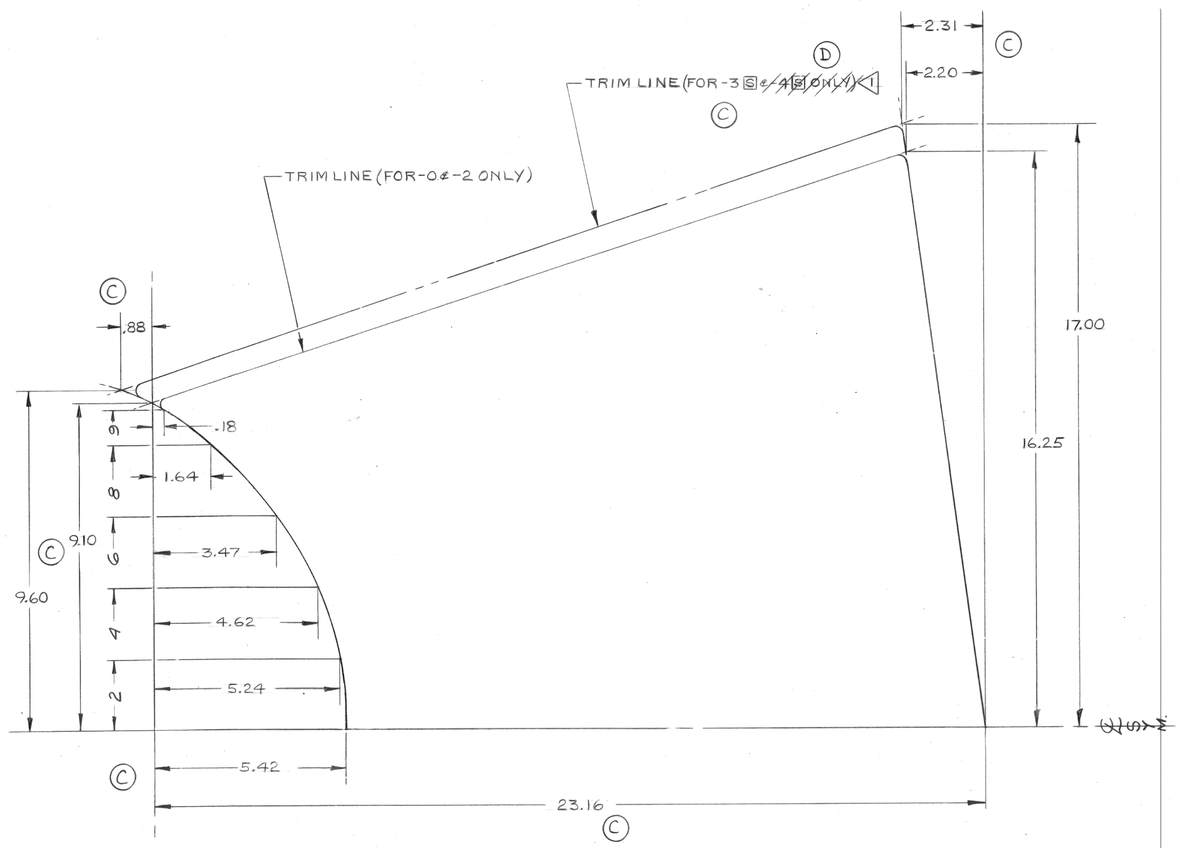

FLAT PATTERN

(C) NOTE:
(1) PARTS MARKED (S) TO BE USED FOR SERVICE ONLY.

61802 D

UNINCORPORATED EOS.

(D) (1)	-4 (S)		.100X27.80X36.75	SHEET-ACRYLIC, COLORLESS TRANSPARENT, ABCITE COATED	
(1)	-3 (S)			PLEXIGLAS, TYPE GM, CLEAR, OR GP ACRYLITE	
(B)	-2		.100 x 25 x 36	SHEET-ACRYLIC, COLORLESS TRANSPARENT, ABCITE COATED	B
(A)	-0		.100x25x36	PLEXIGLAS, TYPE GM, CLEAR, OR GP ACRYLITE	A
PART NO.		NO. REQ.	SIZE	DESCRIPTION	

MATERIAL

SCALE 6 IN. = 1 FT. TOTAL WT.-LBS.

FINISH-PIPER SPECIFICATION #10

MANUFACTURING PRACTICES-PIPER SPECIFICATION #9

MODEL | PER PLANE | NEXT ASSEMBLY | SUPERSEDES | SUP. BY

WINDSHIELD

LET.	REVISION	DATE	BY
D	EO 61802 D INC	10-27-75	C.H.
C	EO. 61802 C INC.	8-8-75	C.H.
B	-2 ADDED.	6-4-71	R.H.
A	OR GP ACRYLITE ADDED IN B/M	5-6-66	JEF

THIS DRAWING IS THE PROPERTY OF THE PIPER AIRCRAFT CORP. AND ITS POSSESSION BY UNAUTHORIZED PERSONS SHALL NOT BE CONSTRUED AS PERMISSION TO REPRODUCE FOR SALE, IN WHOLE OR IN PART. ANY DEVICES SHOWN THEREON.

PIPER AIRCRAFT CORP.
DEVELOPMENT CENTER, VERO BEACH, FLORIDA

V.G.D. 2-23-61
DRAFTSMAN CHECKER

61802 D

8A

T-53

DIETZGEN 138-3 Film